DO NOT SCALE | IF IN DOUBT, ASK | DIMENSIONS IN MM UNLESS STATED | REMOVE ALL BURRS AND SHARP EDGES

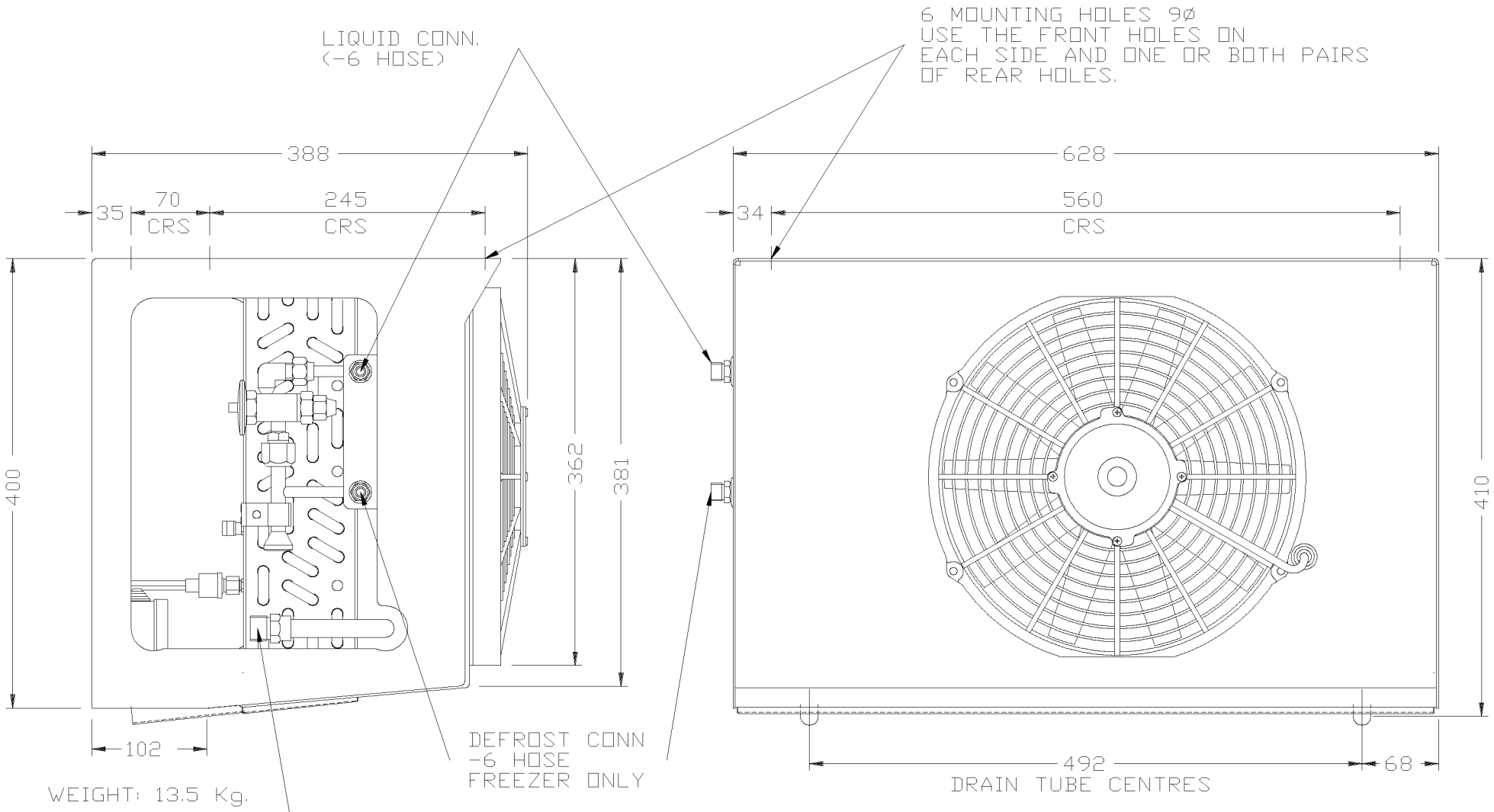

WEIGHT: 13.5 Kg.

© 2000 GAH Ltd,WOODBRIDGE

~~1ST ANGLE PROJECTION~~
~~3RD ANGLE PROJECTION~~

NO	DATE	REF No
2		RKB

DESCRIPTION CHANGED
DRAIN TUBES ADDED

GENERAL TOLERANCES
MACHINED PARTS ±0.25mm ±0.50°
SHEET METAL ±0.5mm ±0.50°
PIPEWORK ±1.00mm ±3.00°
HOLE CENTRES ±0.25mm
UNLESS OTHERWISE SPECIFIED

MATERIAL

DRN BY JCB | DATE 19-8-96
SCALE | FINISH

GAH (Refrigeration) Ltd.,
Building 846 Bentwaters Parks Woodbridge
Suffolk, England, IP12 2TW
Tel 01394 421140 FAX 01394 421151

TITLE
ARROW FREEZE AND CHILL EVAPORATORS

MODEL	DRG NO	ISSUE No	CHECKED
ARROW	19-14638	2	